AD.3.M... MECHANICALLY OPERATED TYPE VALVES CETOP 3/NG6

Max. pressure ports P/A/B	320 bar
Max. pressure port T	160 bar
Max. flow	60 l/min
Minimum operating force - see note (*)	2,5 Kg
Maximum operating force - see note (**)	13 Kg
Cam angle	27°
Fluid viscosity	10 ÷ 500 mm²/s
Fluid temperature	-25°C ÷ 75°C
Ambient temperature	-25°C ÷ 60°C
Max. contamination level	class 10 in accordance with NAS 1638 with filter $\beta_{25} \geq 75$
Weight	1 Kg

• Possible mountings: **E / F / G / H**

• Ordering code see page before

• Note:

(*) In the absence of counter-pressure at port T

(**) with a pressure of 160 bar at port T

1

OVERALL DIMENSIONS

Stroke	12,4 mm
Working stroke	3 mm

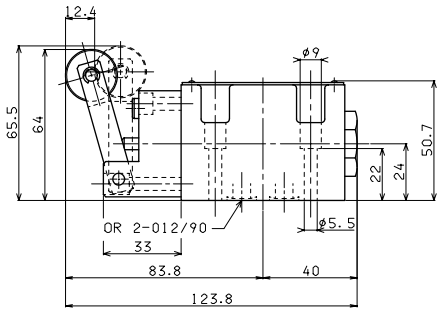

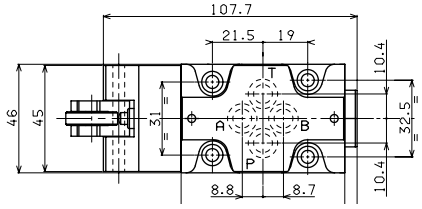

Fixing screws UNI 5931 M5x30
with material specifications min. 8.8
Tightening torque 5 Nm / 0.5 Kgm

Support plane specifications

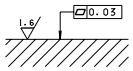

EAD3M - 02/2000/e

AD.3.D... DIRECT MECHANICALLY OPERATED TYPE VALVES CETOP 3/NG6

Max. pressure ports P/A/B	320 bar
Max. pressure port T	20 bar
Max. flow	60 l/min
Operating force - see note (*)	6 Kg
Fluid viscosity	10 ÷ 500 mm²/s
Fluid temperature	0°C ÷ 75°C
Ambient temperature	-25°C ÷ 60°C
Max. contamination level	class 10 in accordance with NAS 1638 with filter $\beta_{25} \geq 75$
Weight	1,5 Kg

• Possible mountings: **E / F / G / H**

• Ordering code see page before

• Note:

(*) In absence of counter-pressure at port T

OVERALL DIMENSIONS

Stroke	6 mm
Extra stroke	2 mm
Working stroke	3 mm

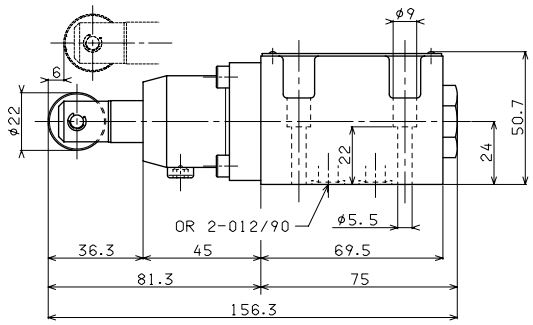

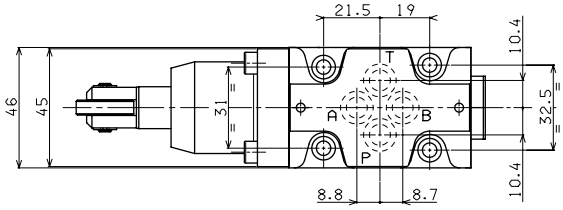

Fixing screws UNI 5931 M5x30
with material specifications min. 8.8
Tightening torque 5 Nm / 0.5 Kgm

Support plane specifications

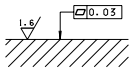

EAD3D - 02/2000/e