HYDAC INTERNATIONAL

HYDAC Compact Power Unit CO1 MF21

For auxiliary functions in machine tools

"Always ready for operation but without consuming any energy" – energy efficiency thanks to accumulator charging function

- **Area of application:**
  Accumulator charging function with integrated safety valve and accumulator pressure release
- 3/2 directional seat valve with check valves in the inlet and outlet
- Integrated Stat-Free® pressure filter element for optimal oil quality
  ➔ Stat-Free® filter element as standard to prevent damaging electrical charging
- Possible to install accumulators up to 3.5l directly on the flange
- **Optional:**
  Control can be extended using ML function modules directly on the flange

Technical specifications

P_{max} = up to 250 bar
Q_{max} = up to 20 l/min

According to EN 60034-1 suitable for:

Short-term operation:
S2 = 5 min* (average value)

Intermittent operation:
S3 = 20 %* (average value)

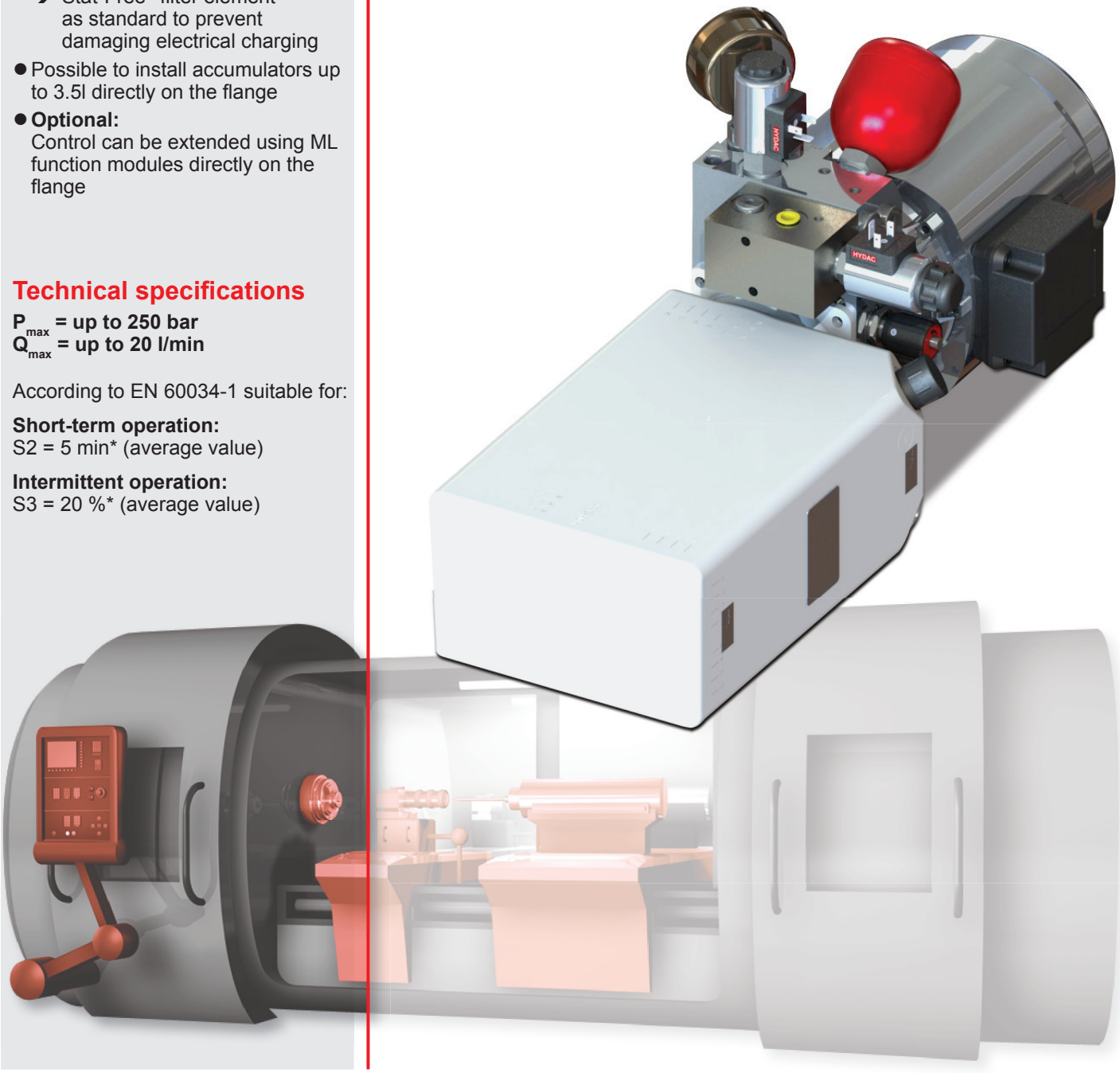

Mounting position of power unit

H = horizontal

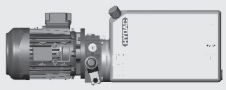

V = vertical

Motor / reservoir orientations

L = left

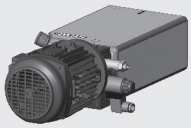

T = top

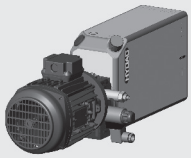

R = right

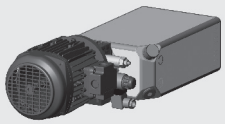

NOTE: Reservoir orientation T not possible when ML stacking valves are added

Model Code

Power unit | Flange control | Add-on equipment | Valve voltage

Example **CO1 H B05 - R - 2.4 - 170 - 03 - TSM - M F21 - DVCRTR - CE150 - M1/EDS3 - M2/MA2 - MA/M - PS/SBO5 + 24DG + ML**

Power unit series

Installation position

- **H** = horizontal
- **V** = vertical

Oil reservoir (see table, page 3)

- B04 = length 165 mm
- B05 = length 220 mm
- B08 = length 340 mm
- B12 = length 500 mm

Motor / reservoir orientation

- **L** = left
- **T** = top
- **R** = right

Flow rate + pressure (see table on page 3)

Motor voltage (see table page 3)

- 03 { 3 phase 230/400 V - 50 Hz; 3 phase 257/480 V - 60 Hz

Thermal overload

- – = no details, without thermal overload = standard
- **TSM** = thermal overload motor, set temperature 80 °C
- **TSO** = thermal overload oil, set temperature 80 °C

} on request

- **MF21** = pressure filter rating 20µm — (06)*
- **M021** = without pressure filter

Valves

- **DV** = mechanical accumulator release (DV5E) — (10)*
- **V** = WSM 06020 V - 01
- **W** = WSM 06020 W - 01
- **WN** = WSM 06020 W - 01M

- **C** = WSM08130C w/o coil — (12)*
- **D** = WSM08130D w/o coil
- **DN** = WSM08130D..01M w/o coil ... with manual override
- **O** = without WSM08

- **R** = check valve (without RV, no details) — (08)*
- **TR** = back-pressure in the return line (0.5 bar; without RV, no details) — (11)*

Pressure relief valve

- e.g. **250 V** = DB4E up to 250 bar (not pre-set)
- **250V200** = DB4E pre-set to 200 bar
- **CE150** = DB4E ... CE (CE approved) set to 150 bar

Add-on equipment

- **DS1** = mech. pressure switch 10-100 bar (connector not supplied)
- **DS2** = mech. pressure switch 50-200 bar (connector not supplied)
- **EDS3** = EDS 3446-2-250-000 — (M1)*
- **EDS8** = EDS 8446-2-250-000

- **MA1** = Ø 63mm pressure gauge c/w adapter 160 bar
- **MA2** = Ø 63mm pressure gauge c/w adapter 250 bar — (M2)*
- **MA4** = Ø 63mm pressure gauge c/w adapter 400 bar

- **M** = Minimess — (MA)*

Accumulator

SBO1	accumulator SBO210-0.16	**SBO10**	accumulator SBO210-1
SBO3	accumulator SBO210-0.32	**SBO14**	accumulator SBO20-1.4
SBO5	accumulator SBO20-0.5	**SBO20**	accumulator SBO210-2.0
SBO7	accumulator SBO210-0.75	**SBO35**	accumulator SBO210-3.5

Valve voltage

- **24DG** = 24 V DC coil without connector
- **230AG** = 230 V AC coil without connector
- **Z4** = with connector Z4 (no details: no connector)

Build-on controls

- **ML** = function module from the ML range (see brochure no. 5.308 ML)

For further data: see brochure no. 5.306 CO1

* see circuit diagram on page 3

Dimensions

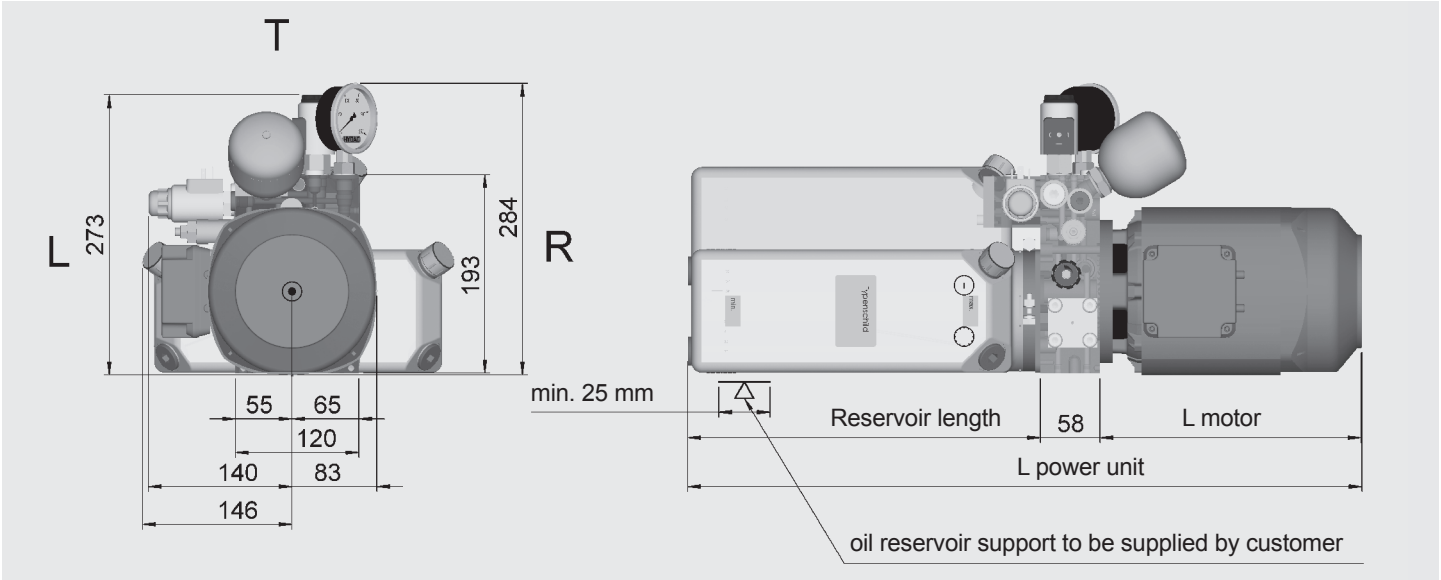

P [kW]	No. of poles	L motor [mm]	ø motor [mm]
0.37	4	220 ± 5	141 ± 5
0.55	4	220 ± 5	141 ± 5
0.75	4	220 ± 5	141 ± 5
1.1	4	255 ± 5	159 ± 5
1.5	4	255 ± 5	159 ± 5
2.2	2	255 ± 5	159 ± 5
2.2*	4	280 ± 5	176 ± 5
3*	2	280 ± 5	176 ± 5

*On 2.2 and 3 kW motors the flange must have at least 15 mm of support.

Specifications

Flow rate:	up to 20.0 l/min
Continuous pressure:	max. 250 bar
Coil duty rating:	S2 (short-term operation) : 5 min S3 (intermittent duty) : 20 %
Motor:	PN = 0.37 kW ... 3.0 kW (4; 5.5 kW on request)
Motor voltages:	3 phase 230/400 V - 50 Hz (other motor voltages on request, min. order 10 pcs.)
Protection class:	DIN EN 60034-5 min IP54
Pump displacement:	1.0 cm^3/rev. ... 10.0 cm^3/rev
Reservoir volume: Usable volume:	1.8 - 8.4 l 1.2 - 7.8 l
Operating fluid:	Hydraulic oil to DIN 51524 Part 2
Temperature range of operating fluid:	-20 °C to max. +80 °C
Ambient temperature range:	-20 °C to max. +40 °C
Viscosity range: Filtration:	10 - 380 mm^2/s is recommended Operating fluid to ISO 4406 Class 21/19/16 or cleaner
Cooling:	Convection or air cooling
Weight:	from 12 to 20 kg
Installation:	Vertical, horizontal

The information in this brochure relates to the operating conditions and applications described.

For applications and operating conditions not described, please contact the relevant technical department.

Subject to technical modifications.

HYDAC Fluidtechnik GmbH
Justus-von-Liebig-Str.
D-66280 Sulzbach/Saar
Tel: 0 68 97 /509-01
Fax.: 0 68 97 /509-577
E-Mail: flutec@hydac.com

Oil reservoir

Reservoir code	Filling volume / Usable volume [l]***			Reservoir length [mm]
	Horizontal, reservoir position R and L	Horizontal, reservoir position T**	Vertical	
B04	1.9 / 1.5	2.2 / 2.0	1.8 / 1.2	165* ± 5
B05	2.7 / 2.2	3.0 / 2.7	3.0 / 2.4	220* ± 5
B08	4.4 / 3.5	5.1 / 4.6	5.1 / 4.5	340* ± 5
B12	6.5 / 5.2	8.4 / 7.6	8.4 / 7.8	500* ± 5

* where mounted horizontally, support for oil reservoir must be provided by the customer – see dimensions

** cannot be selected if stacking valves are to be added

*** The usable volume given is the maximum value (achieved with a clean suction filter, low to medium flow rate and viscous fluid!)

Subject to modifications.

Flow rate and pressure

Flow rate				Motor output at 3 ~ 50 Hz 230 / 400 V Motor also suitable for 3 ~ 60 Hz 257 / 480 V } Motor code 03						
50 Hz [l/min]	60 Hz [l/min]	No. poles on motor	Displ. pump [ccm/rev]	0.37 kW [bar]	0.55 kW [bar]	0.75 kW [bar]	1.1 kW [bar]	1.5 kW [bar]	2.2 kW [bar]	3.0 kW [bar]
1.3	**1.6**	4	1.0	**215**	**250**					
2.4	**2.9**	4	2.0	**110**	**170**	**235**	**250**			
3.7	**4.4**	4	2.65	**75**	**115**	**155**	**230**	**250**		
5.0	**6.0**	4	3.75	**50**	**85**	**115**	**170**	**230**	**250**	
6.3*	**7.6***	4	4.75*	**40**	**70**	**90**	**140**	**185**	**250**	
7.4	**8.9**	2	2.65						**230**	**250**
8.6*	**10.3***	4	6.3*	**30**	**50**	**65**	**100**	**130**	**200**	
10.0	**12.0**	2	3.75						**165**	**230**
12.6*	**15.1***	2	4.75*						**135**	**185**
13.3*	**16.0***	4	10.0*		**30**	**40**	**60**	**85**	**120**	
17.3*	**20.7***	2	6.3*						**95**	**130**
20.0*		2	8.0*						**80**	**110**
				4-pole motor types are low-noise						

* not possible with oil reservoir B04

Circuit diagram

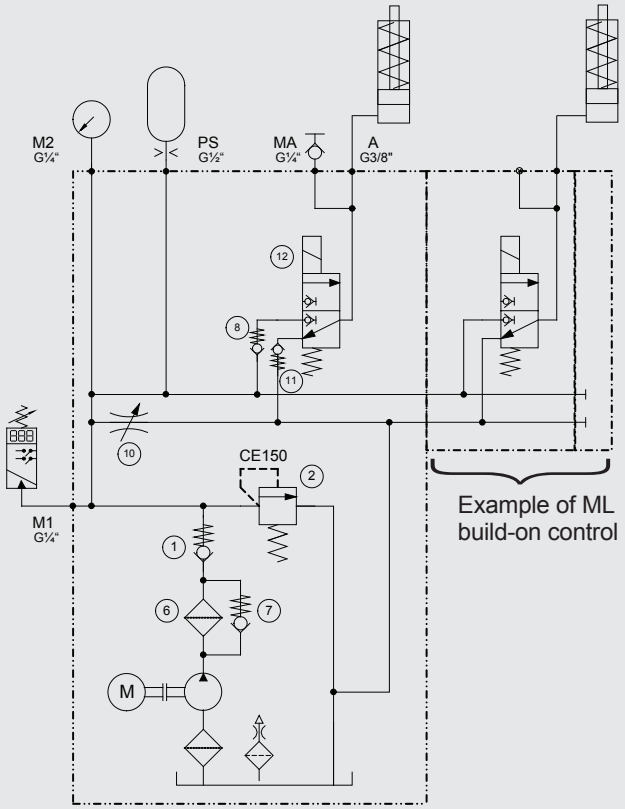
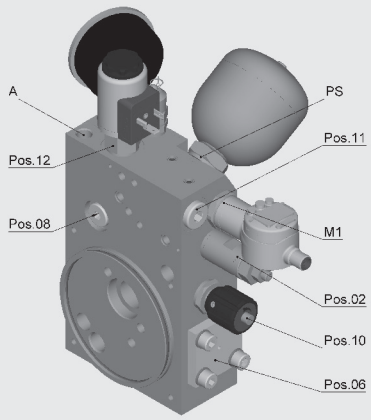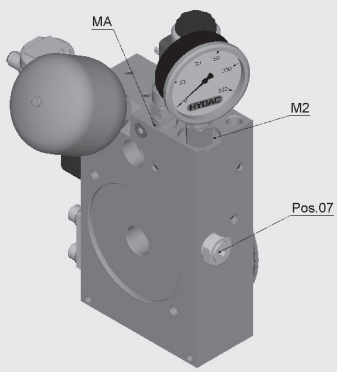
3D model of flange unit