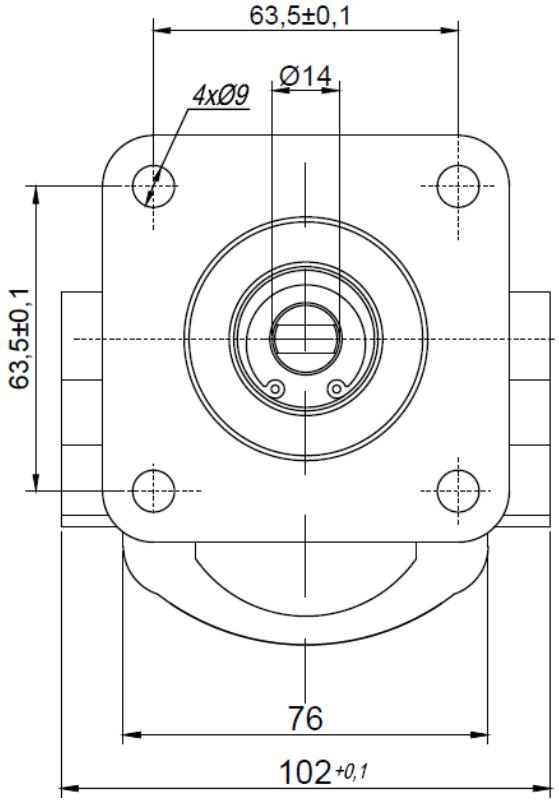

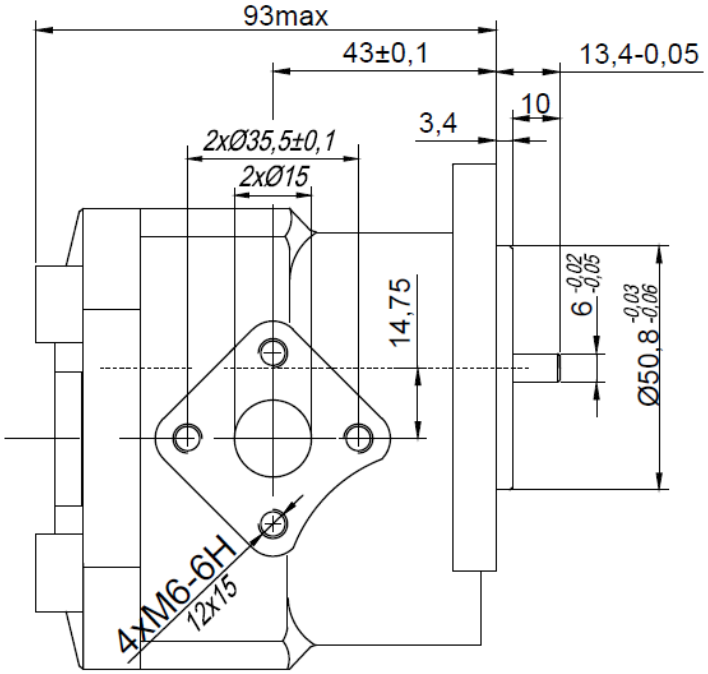

Type	Displacement	Flow		Pressure	max Speed	Dimension							
		at 1500 rpm	at max rpm	P_{nom}	n	A	B	Inlet			Outlet		
	cm^3/rev	l/min	l/min	bar	rpm	mm	mm	M	G	U	M	G	U
15A(C) 4,5 X881	4,52	6,30	14,7	200	3500								
15A(C) 6,3 X881	6,36	8,87	20,7	200	3500								
15A(C) 8,2 X881	8,2	11,44	26,7	200	3500								
15A(C) 10,1 X881	10,12	14,12	28,2	180	3000								
15A(C) 12 X881	12,05	16,81	28,00	160	2500								

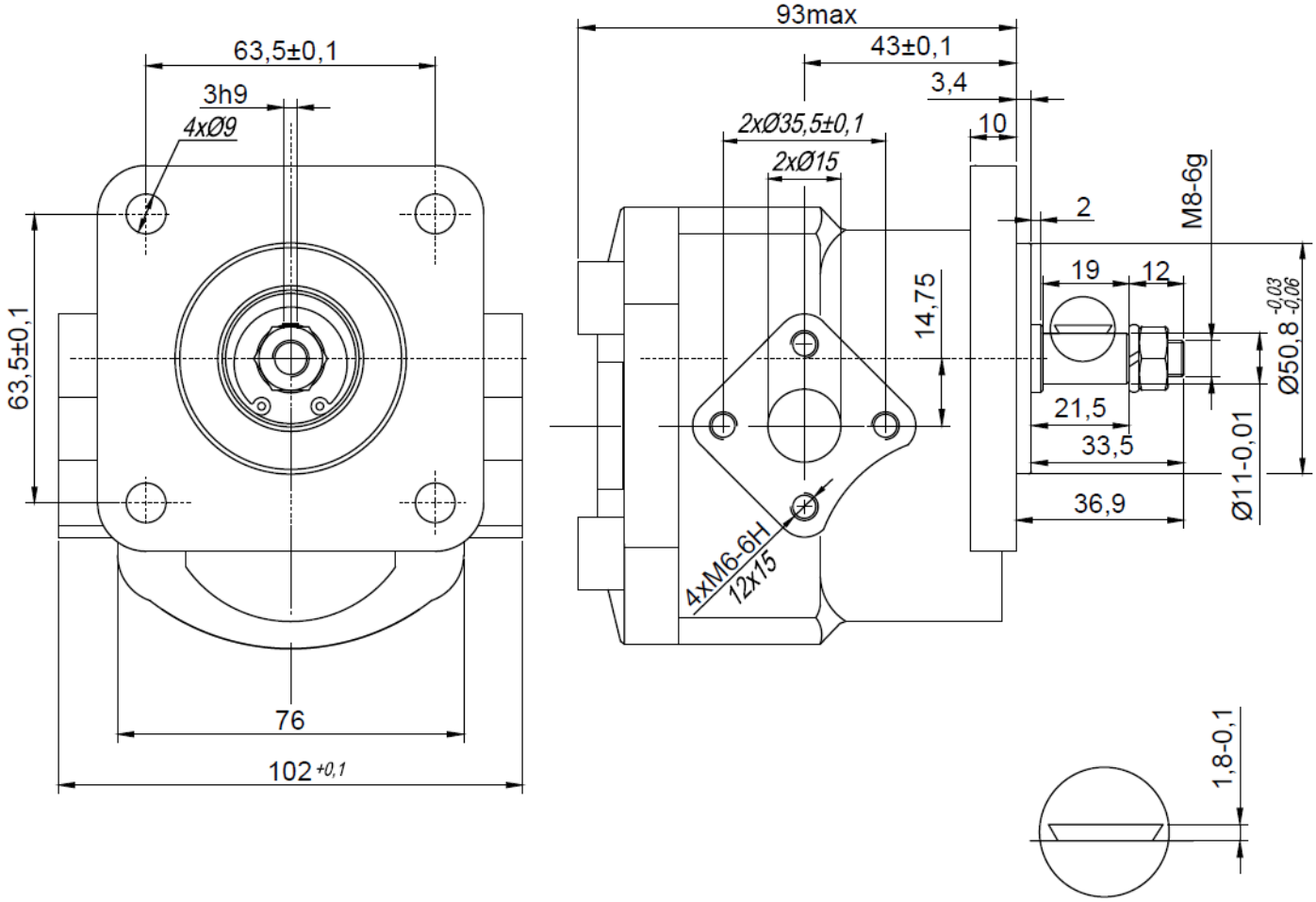

Type	Displacement	Flow		Pressure	max Speed	Dimension							
		at 1500 rpm	at max rpm	P_{nom}	n	A	B	Inlet			Outlet		
	cm^3/rev	l/min	l/min	bar	rpm	mm	mm	M	G	U	M	G	U
15A(C) 4,5 X882	4,52	6,30	14,7	200	3500								
15A(C) 6,3 X882	6,36	8,87	20,7	200	3500								
15A(C) 8,2 X882	8,2	11,44	26,7	200	3500								
15A(C) 10,1 X882	10,12	14,12	28,2	180	3000								
15A(C) 12 X882	12,05	16,81	28,00	160	2500								

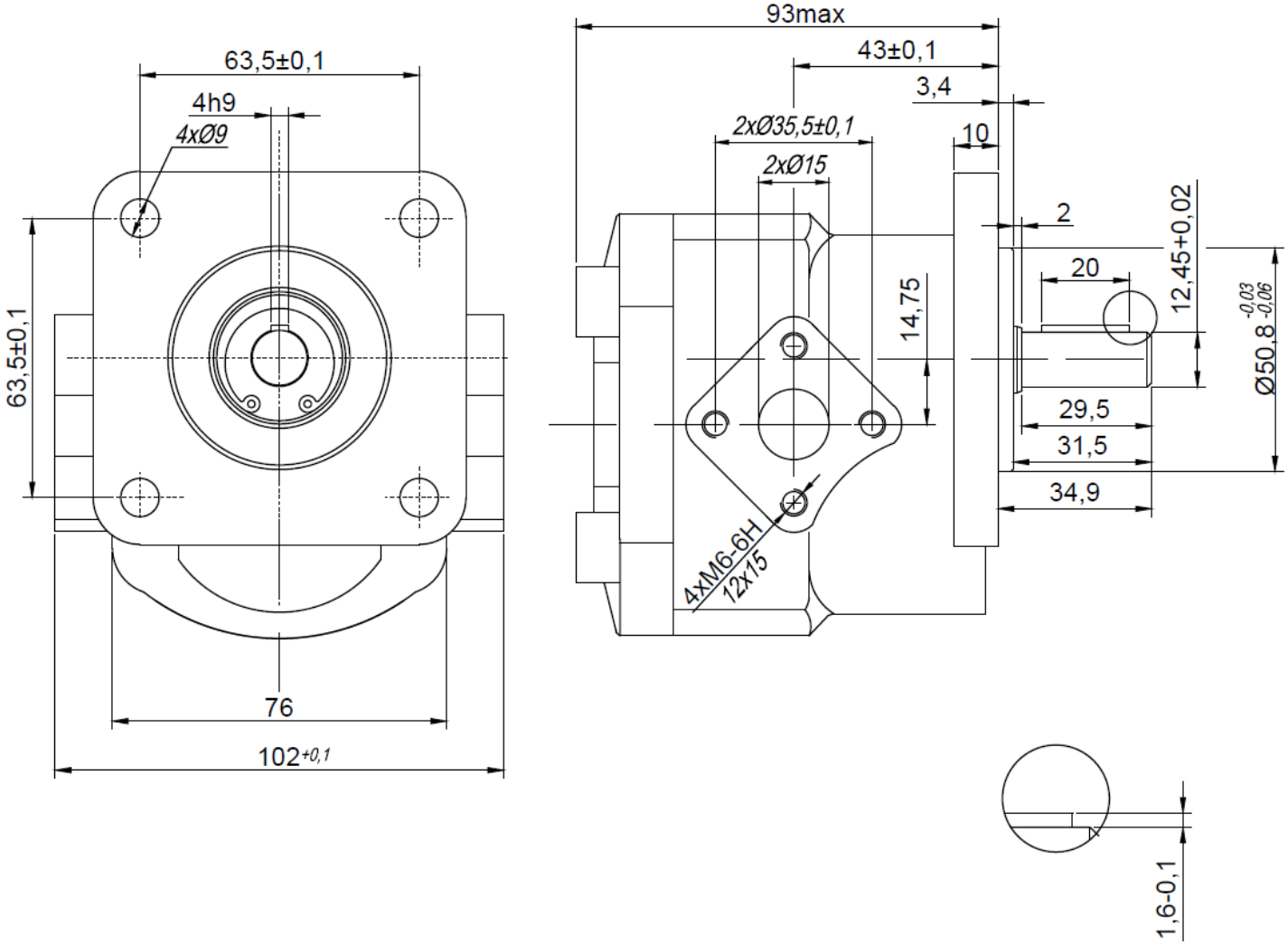

Type	Displacement	Flow		Pressure	max Speed	Dimension							
		at 1500 rpm	at max rpm	P_{nom}	n	A	B	Inlet			Outlet		
	cm^3/rev	l/min	l/min	bar	rpm	mm	mm	M	G	U	M	G	U
15A (C) 8,2 X882-V12,5	8,2	11,44	26,7	200	3500								
15A (C) 10,1 X882-V12,5	10,12	14,12	28,2	180	3000								
15A (C) 12 X882-V12,5	12,05	16,81	28,0	160	2500								

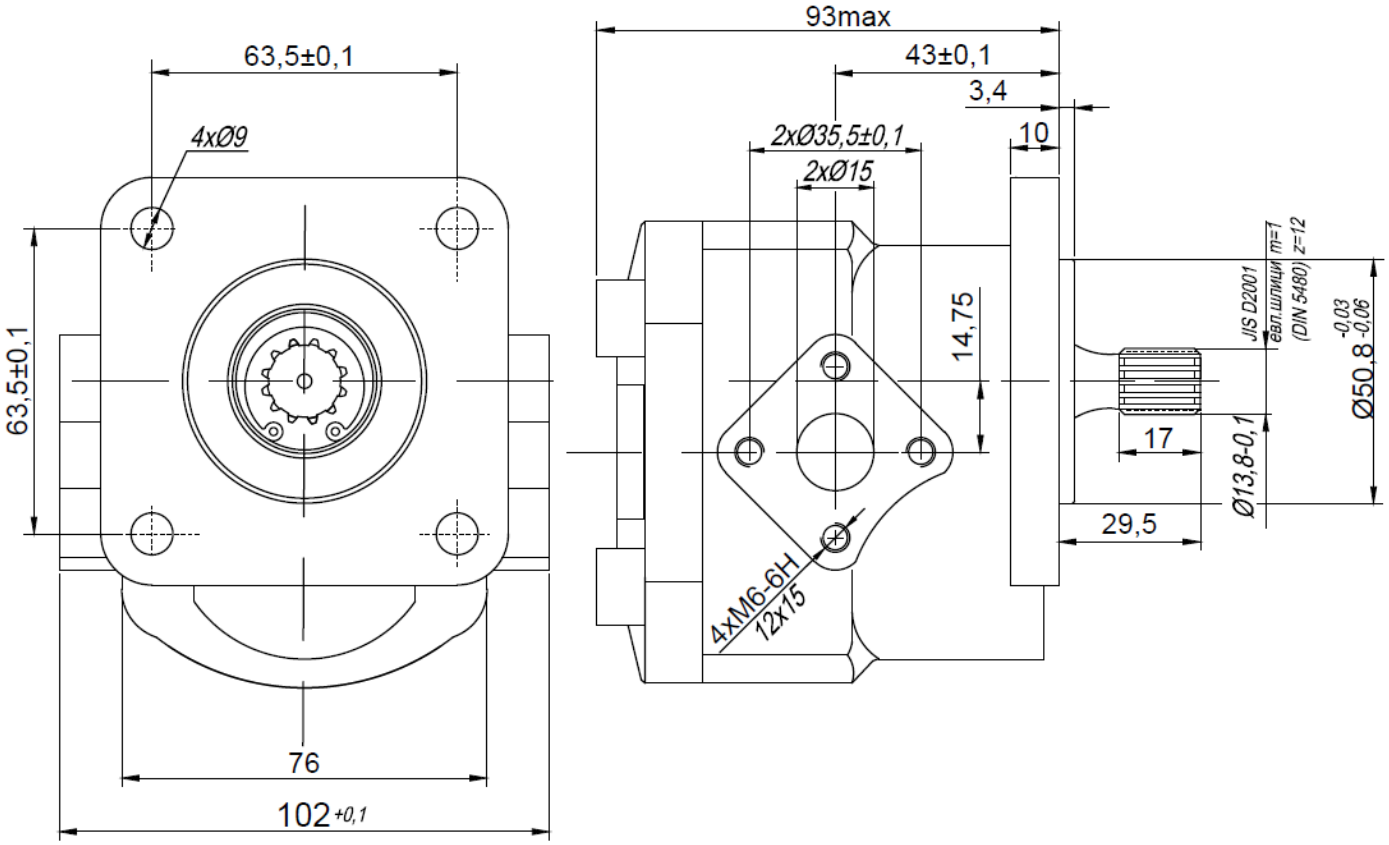

Type	Displacement	Flow		Pressure	max Speed	Dimension							
		at 1500 rpm	at max rpm	P_{nom}	n	A	B	Inlet			Outlet		
	cm^3/rev	l/min	l/min	bar	rpm	mm	mm	M	G	U	M	G	U
15A(C) 8,2 X 883	8,2	11,44	26,7	200	3500								
15A(C) 10,1 X 883	10,12	14,12	28,2	180	3000								
15A(C) 12 X 883	12,05	16,81	28,0	160	2500								

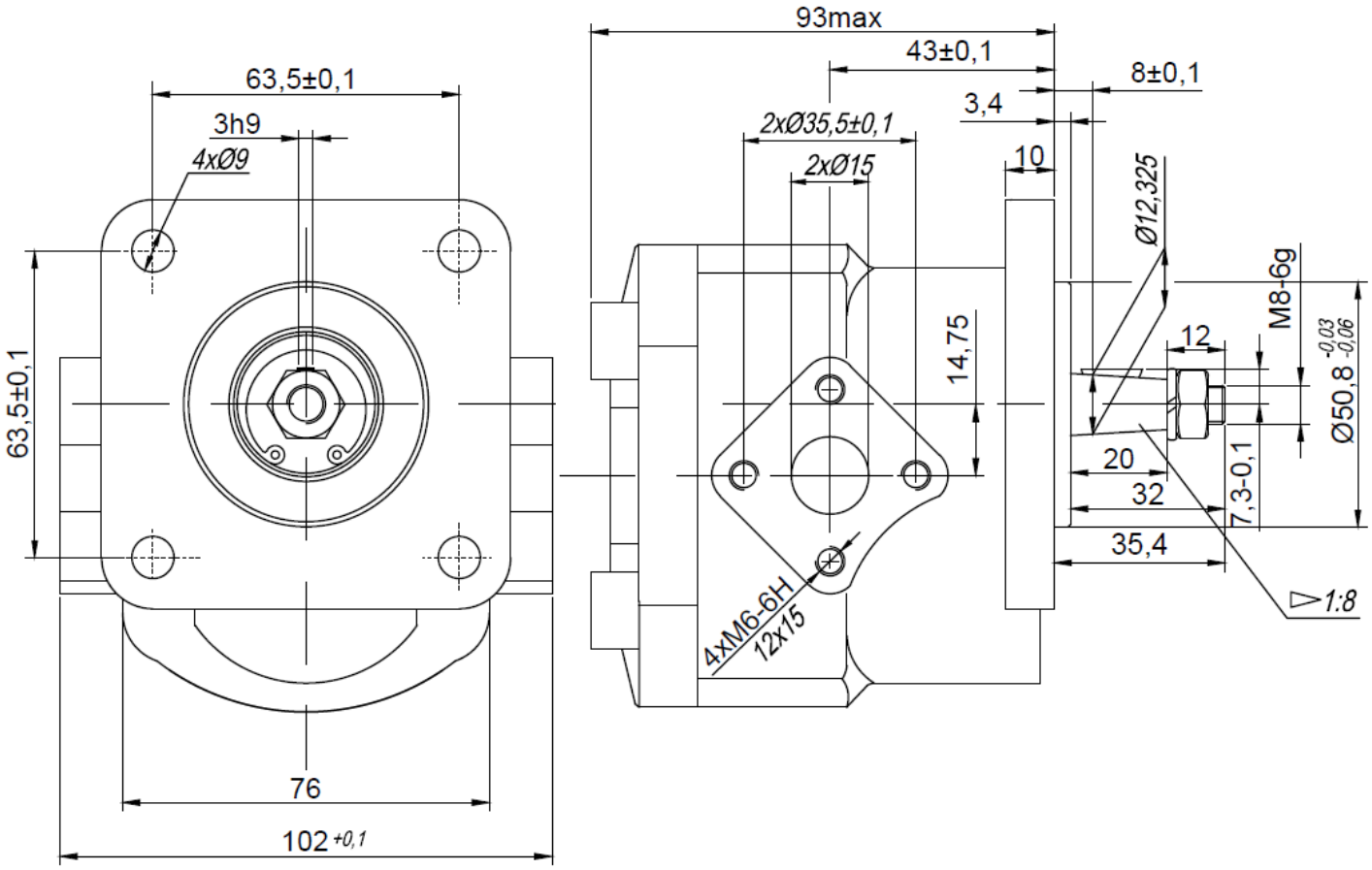

Type	Displacement	Flow		Pressure	max Speed	Dimension							
		at 1500 rpm	at max rpm	P_{nom}	n	A	B	Inlet			Outlet		
	cm^3/rev	l/min	l/min	bar	rpm	mm	mm	M	G	U	M	G	U
15A(C) 8,2 X 884	8,2	11,44	26,7	200	3500								
15A(C) 10,1 X 884	10,12	14,12	28,2	180	3000								
15A(C) 12 X 884	12,05	16,81	28,0	160	2500								

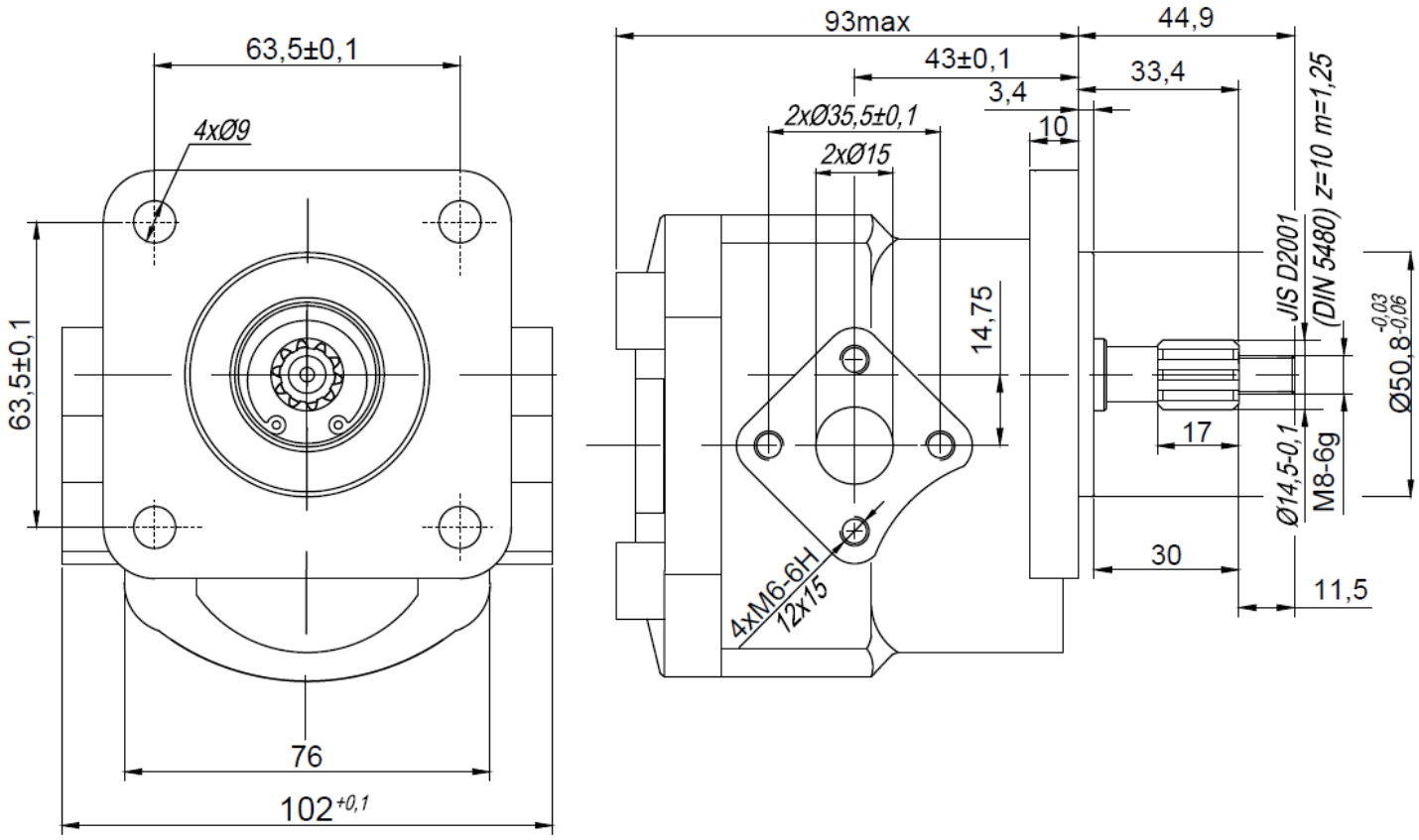

Type	Displacement	Flow		Pressure	max Speed	Dimension							
		at 1500 rpm	at max rpm	P_{nom}	n	A	B	Inlet			Outlet		
	cm^3/rev	l/min	l/min	bar	rpm	mm	mm	M	G	U	M	G	U
15A(C) 8,2 X 885	8,2	11,44	26,7	200	3500								
15A(C) 10,1 X 885	10,12	14,12	28,2	180	3000								
15A(C) 12 X 885	12,05	16,81	28,0	160	2500								