Gear pumps type PFC

external gears - fixed displacement

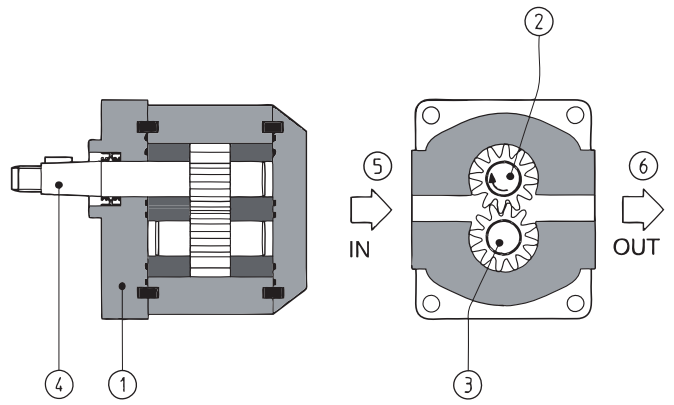

① body
② driving gear
③ driven gear
④ shaft
⑤ inlet port
⑥ outlet port

PFC-1

PFC are fixed displacement external gear pumps, axial hydraulic balancing, simple and sturdy construction, low noise level.

Suitable for hydraulic oils or synthetic fluids having similar lubricating characteristics.

Wide variety of displacements: from 1,6 up to 52 cm³/rev.

Max pressure up to 260 bar.

1 MODEL CODE

PFC – 2 14 / - ** /*

Fixed displacement gear pump

Size, see section 2: **1, 2, 3**

Displacement [cm³/rev], see section 2
for PFC 1: **14, 20, 28, 35, 42, 49, 60, 74, 87, 99**
for PFC 2: **07, 10, 11, 14, 16, 18, 21, 27**
for PFC 3: **27, 40, 54**
Other displacements are available on request

Direction of rotation (as viewed at the shaft end):
- = clockwise (supplied standard if not otherwise specified)
S = counterclockwise
Note: PFC are not reversible. The direction of rotation is indicated by an arrow on the pump casing; the same arrow shows also the direction of the oil flow (from the inlet to the outlet port)

Series number

Options on request

Hydraulic symbol

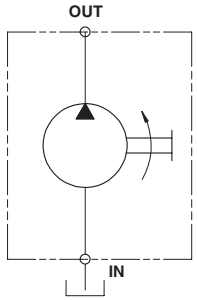

2 OPERATING CHARACTERISTICS at 1450 rpm (based on mineral oil ISO VG 46 at 50°C)

Model	Displacement cm³/rev	Max pressure (1)	Speed range rpm
PFC-114	1,6	260 bar	650 - 4000
PFC-120	2,13		
PFC-128	2,67		
PFC-135	3,34		
PFC-142	4,27	250 bar	
PFC-149	5,34		
PFC-160	6,2	230 bar	650 - 3500
PFC-174	6,67		
PFC-187	8,51	180 bar	
PFC-199	10,67	140 bar	
PFC-207	6,61	250 bar	600 - 4000
PFC-210	9,17		600 - 3500
PFC-211	11,23		
PFC-214	14,53		500 - 3500
PFC-216	16,85		500 - 3000
PFC-218	19,09	200 bar	500 - 3000
PFC-221	21,14		
PFC-227	28,21	130 bar	500 - 2000
PFC-235	33,03	130 bar	
PFC-327	26,70	250 bar	350 - 3000
PFC-334	34,55	240 bar	
PFC-340	39,27	240 bar	
PFC-343	43,98	230 bar	
PFC-354	51.83	210 bar	350 - 2500

(1) For intermittent duty, 10% higher peak pressures are admitted.

3 MAIN CHARACTERISTICS OF GEAR PUMPS TYPE PFC

Installation position	Any position.
Supply pressure range	0,7 ÷ 3 bar
Loads on the shaft	Axial and radial loads are not allowed on the shaft. The coupling should be sized to absorb the power peak.
Ambient temperature	from -20°C to +70°C
Fluid	Hydraulic oil as per DIN 51524...535; for other fluids,consult our technical office
Recommended viscosity Maximum viscosity allowed	from 12 to 100 mm^2/s up to 750 mm^2/s
Fluid contamination class $\Delta p<140$ $140<\Delta p<210$ $\Delta p>210$	 ISO 21/19/16 (filters at 25 µm value with $\beta x_{(c)} \geq 75$) ISO 20/18/15 (filters at 10 µm value with $\beta x_{(c)} \geq 75$) ISO 19/17/14 (filters at 10 µm value with $\beta x_{(c)} \geq 75$)
Fluid temperature	Max 70°C

4 DIAGRAMS (based on mineral oil ISO VG 46 at 50°C)

4.1 = Torque versus pressure diagram

1 = PFC-1
2 = PFC-2
3 = PFC-3

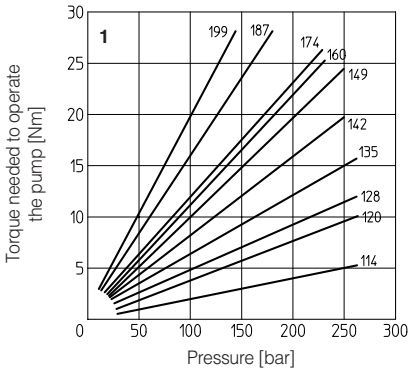

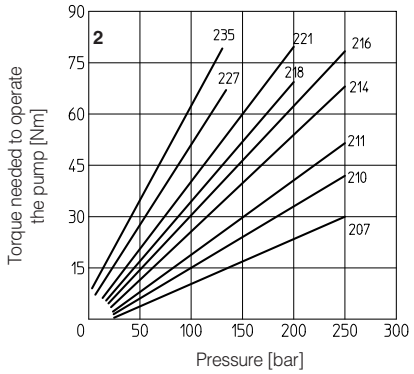

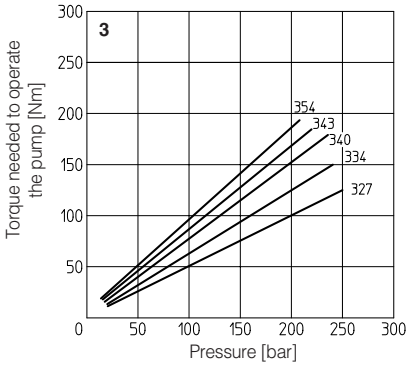

4.2 = Flow versus speed diagram
stated at 20 bar

4 = PFC-1
5 = PFC-2
6 = PFC-3

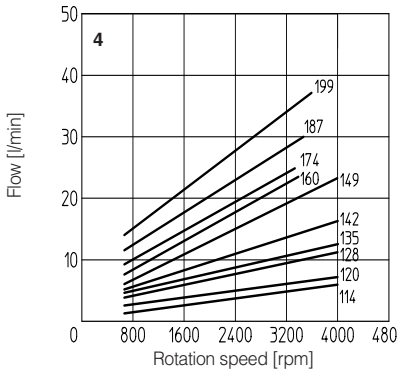

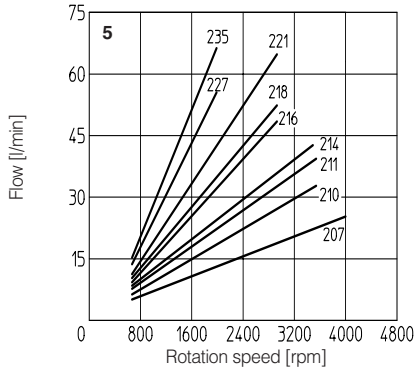

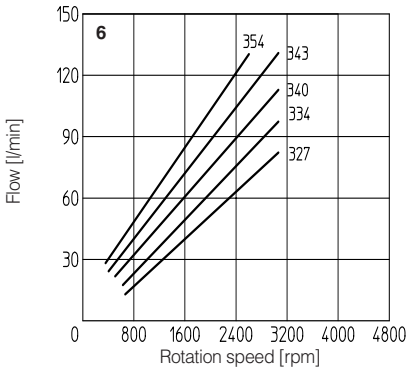

5 DRIVE SHAFT AND LIMITS OF TORQUE

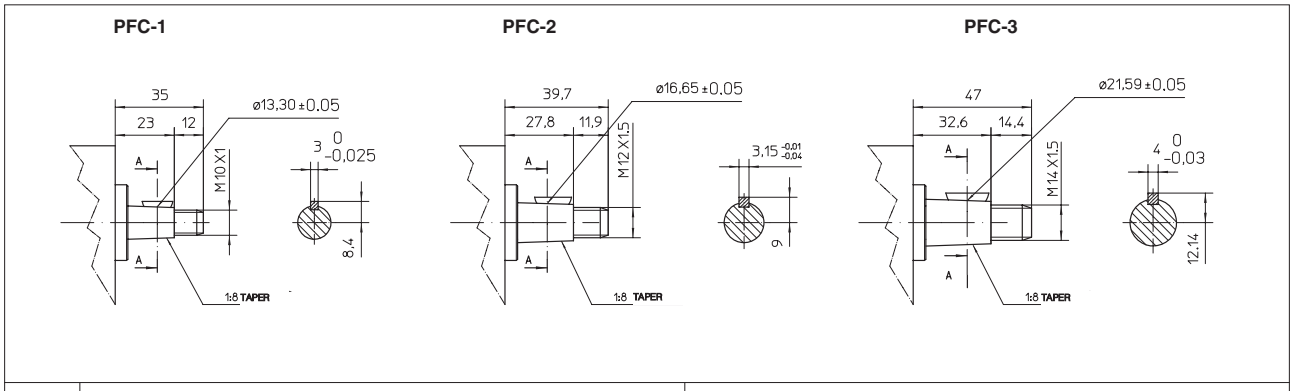

Pump model	Maximum driving torque [Nm]	Maximum torque available on the end of the through shaft [Nm]
PFC-1	60	30
PFC-2	140	110
PFC-3	240	180

The values of torque needed to operate the pumps are shown for each type of the "torque versus pressure diagram" at section 4.

6 DIMENSIONS [mm]

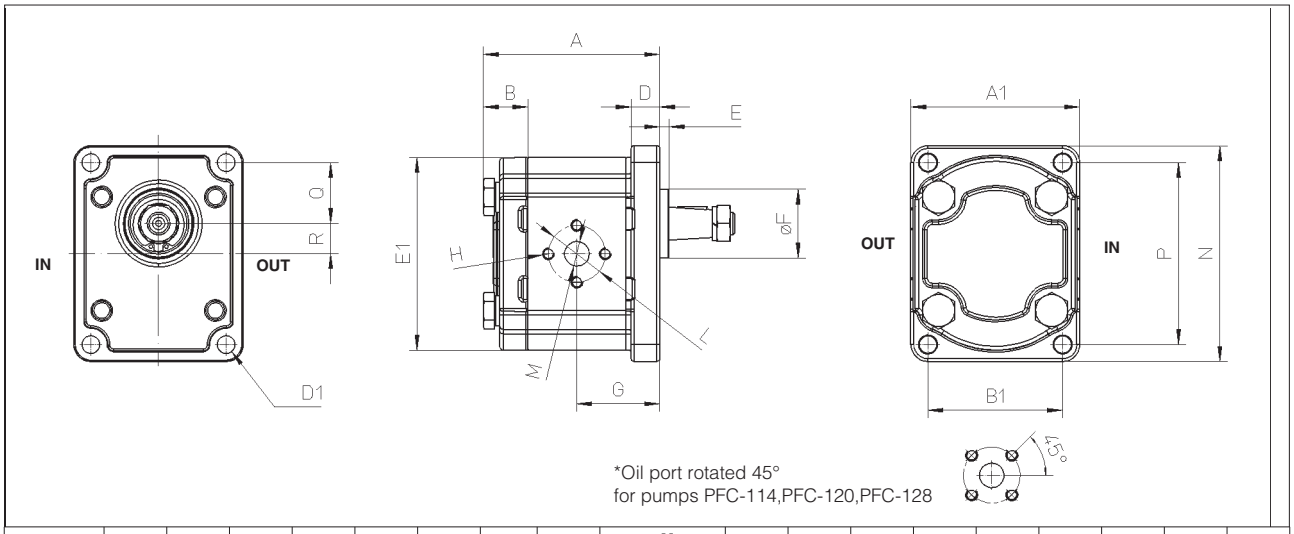

Pump model	A	B	D	E	øF	G	H	øL	øM In	øM Out	N	P	Q	R	A1	B1	øD1	E1	Mass Kg ~
PFC-114 *	67,8					32,4													1,3
PFC-120 *	69,4					33,2			13	8									1,3
PFC-128 *	71					34													1,3
PFC-135	73					35													1,4
PFC-142	75,8	17	10	5,4	30 f8	36,44	M6	30			89,2	73	24,5	11.3	72,2	56	6,5	74	1,5
PFC-149	79					38													1,5
PFC-160	81,6					39,3			13	13									1,6
PFC-174	83					40													1,7
PFC-187	88,5					42,8													1,7
PFC-199	95					46													1,9
PFC-207	95,5					45	M6	30	13	13									2,7
PFC-210	99,3					46,9													2,8
PFC-211	102,5					48,5													2,9
PFC-214	107,5					51													2,9
PFC-216	111	23,5	15	5	36,5 f8	52,75	M8	40	19	19	114,2	96,2	32,2	16	89,5	71,5	9	102	3
PFC-218	114,4					54,5													3
PFC-221	117,5					56													3,2
PFC-227	128,2					61,35													3,3
PFC-235	135,5					65													3,5
PFC-327	133					64,5	M8	40	19	19									6,4
PFC-334	138					67													6,5
PFC-340	141	28	19	5	50,8 f8	68,5	M10	56	27	27	152	128	42,5	23,5	122	98	12	148	6,9
PFC-343	144					70													7
PFC-354	149					72,5													7,3