MOTORIMPEX

PRESSURE TEST DEVICES MI-001

DESCRIPTION

The MI-001 diagnostic case with pressure gauges is designed for measuring pressure and monitoring the operation of pressurized fluids. The diagnostic and hydraulic system adjustment kit is equipped with four pressure gauges. Thanks to two high-pressure test hoses, measurements can be performed simultaneously on two lines. The product ensures reliable and accurate pressure readings.

APPLICATION

- Mobile and industrial hydraulics
- Automotive sector
- Hydraulic presses
- Heavy machinery
- Special-purpose vehicles (cranes, fire trucks, refuse trucks, etc.)

global@motorimpex.ua

+38 (050) 305-77-01
+48 (579) 779-979

TECHNICAL SPECIFICATIONS

Model	MI-001
Pressure gauge	Pressure gauge ranges to be specified by the customer (4 pcs. included)
Permissible operating fluid temperature	+20°C ... +60°C
Test fittings for the pressure test device	M16x2 – 1/8" BSP hydraulic fittings for pressure gauges: 2 pcs. (5) M16x2 – 1/4" BSP hydraulic fittings for pressure gauges: 2 pcs. (6) M16x2 – 3/8" BSP hydraulic fittings for pressure gauges: 2 pcs. (7) M16x2 – M16x1.5 DKOL hydraulic fittings for pressure gauges: 2 pcs. (8) M16x2 – M18x1.5 DKOL hydraulic fittings for pressure gauges: 2 pcs. (9) M16x2 – M22x1.5 DKOL hydraulic fittings for pressure gauges: 2 pcs. (10)
Test hoses	DN2 M16x2 – 2 m (11–12) Dn2 M16x2 – 5 m (11, 13)
Maximum working pressure of the hoses	63 MPa

DIMENSIONAL DRAWINGS

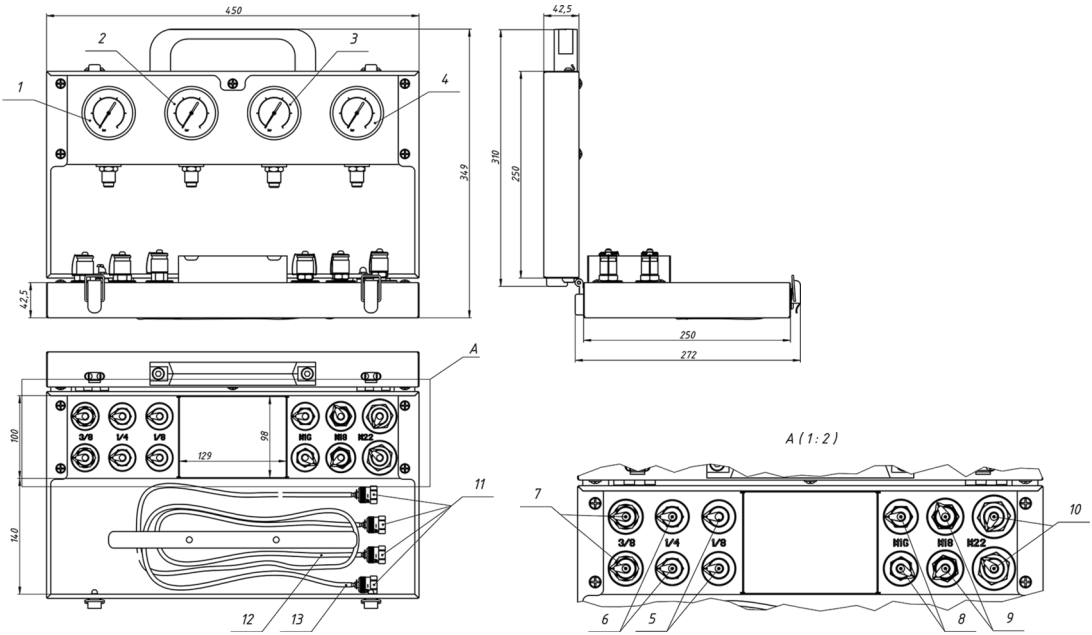

MOTORIMPEX

ORDER FORM

Fill in the blank fields "..." with the corresponding numbers to create the order code. The pressure gauges included in the hydraulic system diagnostic and adjustment kit are supplied upon request, according to the customer's specifications.

TB 1.4 - ... - ... - ... -... -MI-001

1. 0 - 0,6 MPa	**7.** 0 - 16 MPa
2. 0 - 1 MPa	**8.** 0 - 25 MPa
3. 0 - 2,5 MPa	**9.** 0 - 31,5 MPa
4. 0 - 4 MPa	**10.** 0 - 40 MPa
5. 0 - 6 MPa	**11.** 0 - 60 MPa
6. 0 - 10 MPa	

Note:
The range of diagnostic connection options can be extended according to your requirements based on the following catalog:
https://motorimpex.ua/files/downloads/Test-couplings-Minipress.pdf